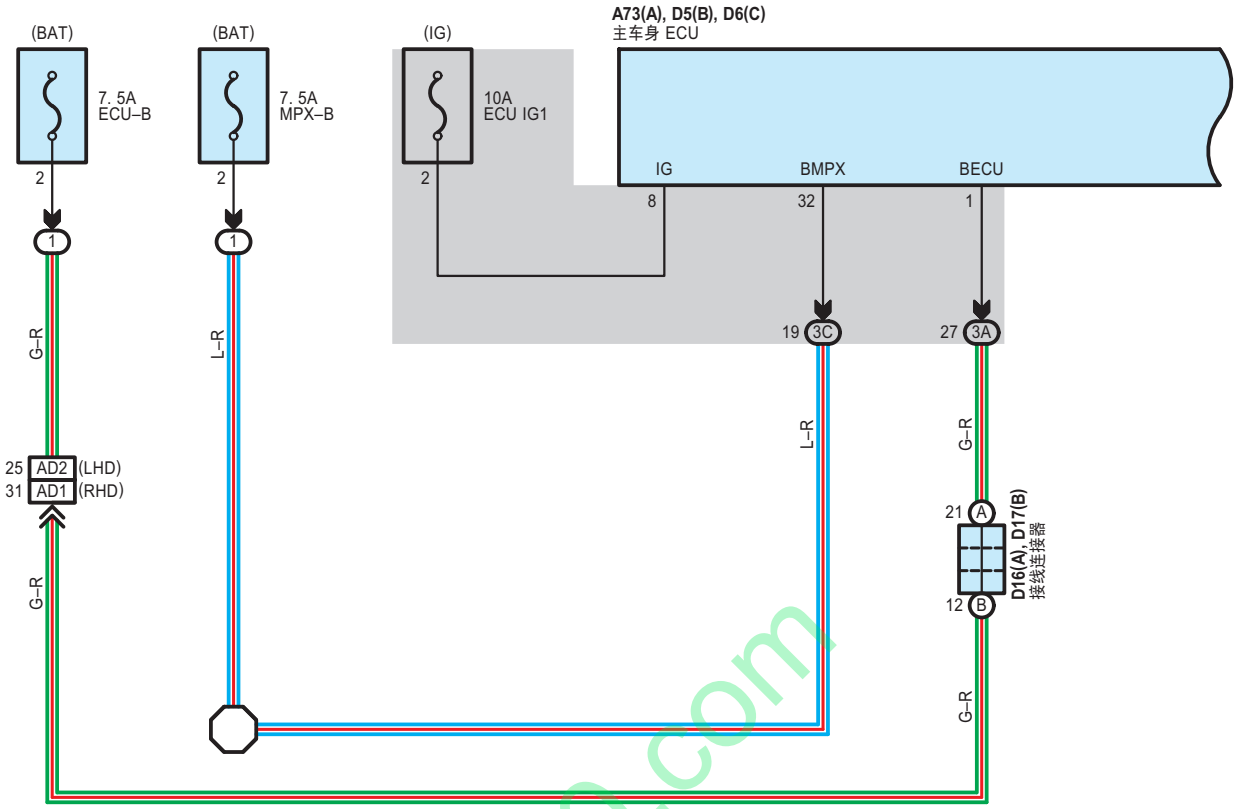

www.car60.com